part no.: SW1045M

DPDT Momentary Push switch, solder lugs

electrical specification:

rating:	4A@125V; 2A@250V AC
contact R:	20mΩ max.
insulation:	500V DC, 100MΩ min.
Dielectric strenght:	1 min 1000V AC
electrical life:	10,000 cycles

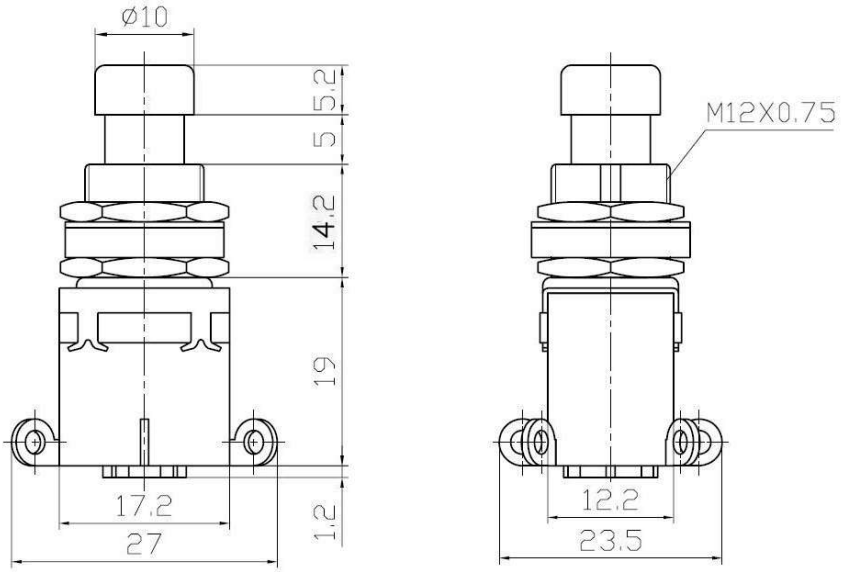

Mounting

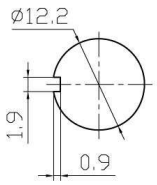

Circuitry

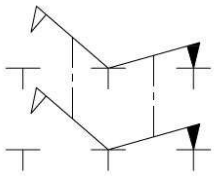

(ON) - ON

23.07.2021